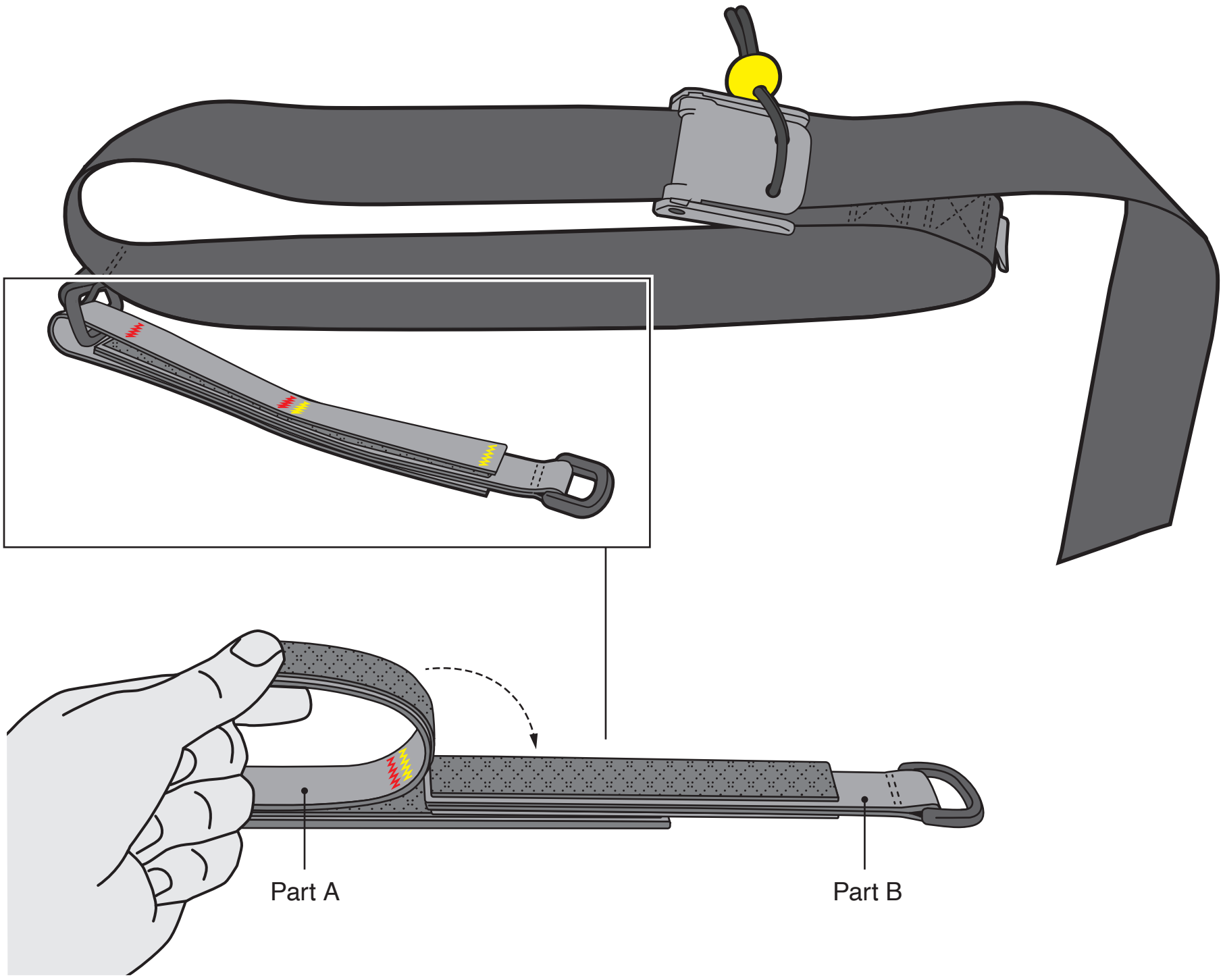
Part A
Part B

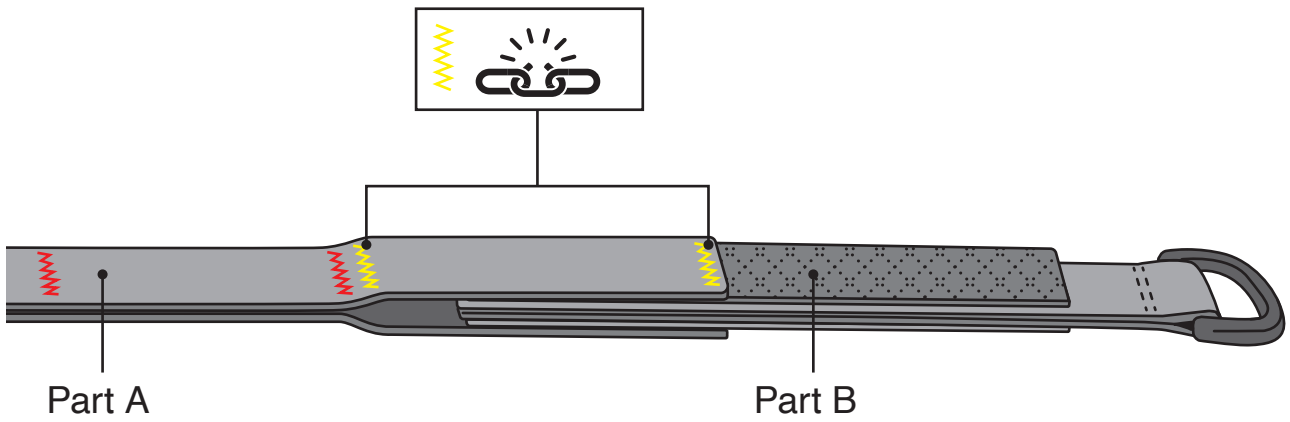
Part A
Part B

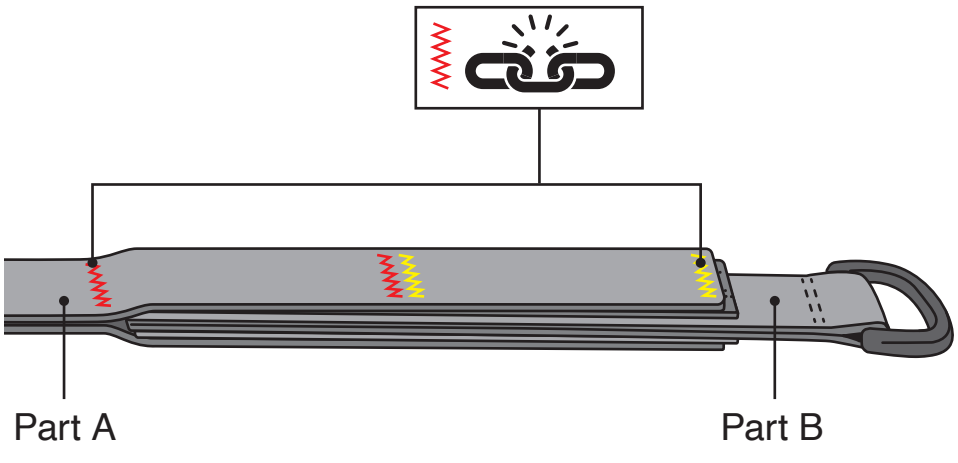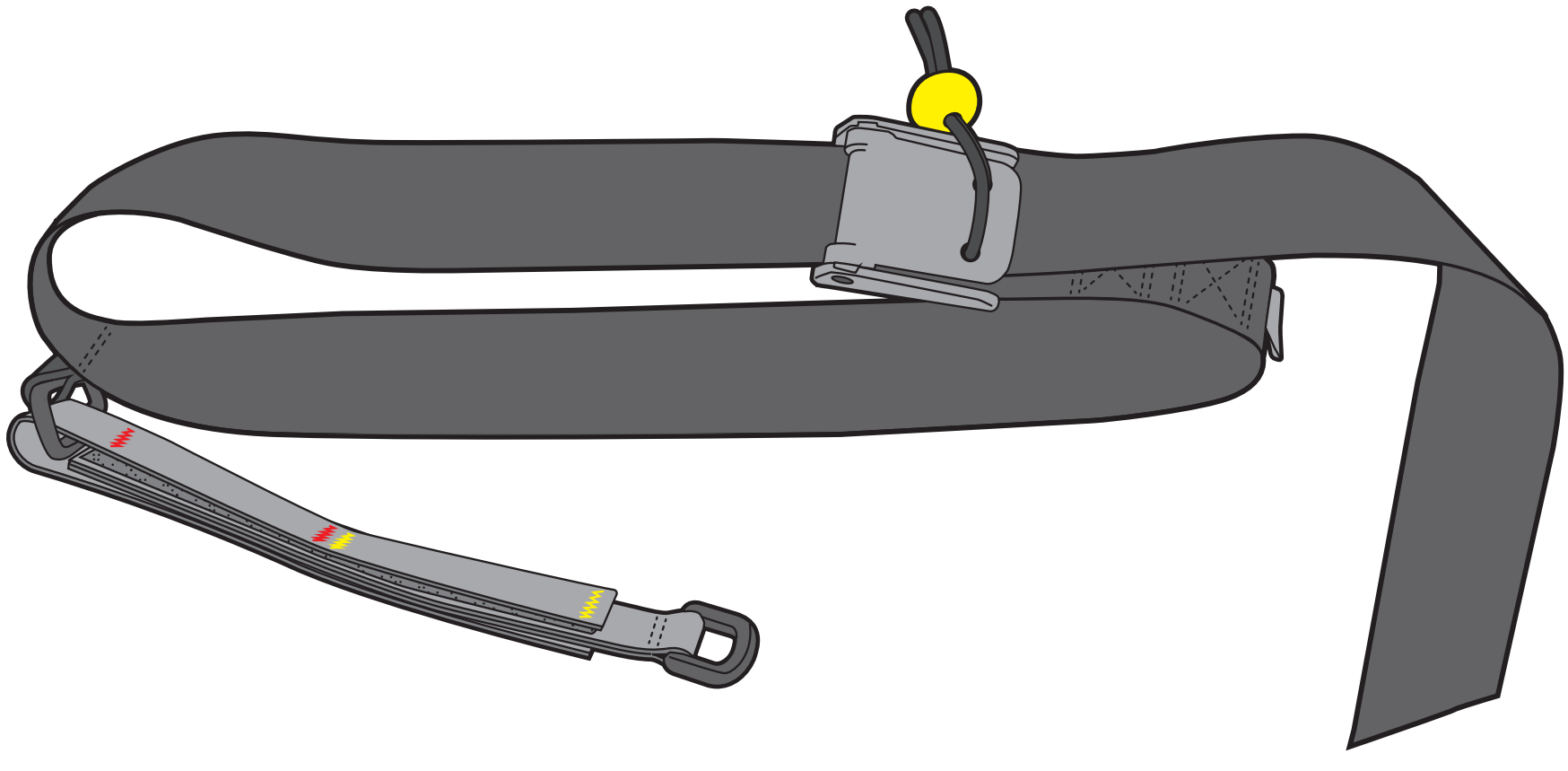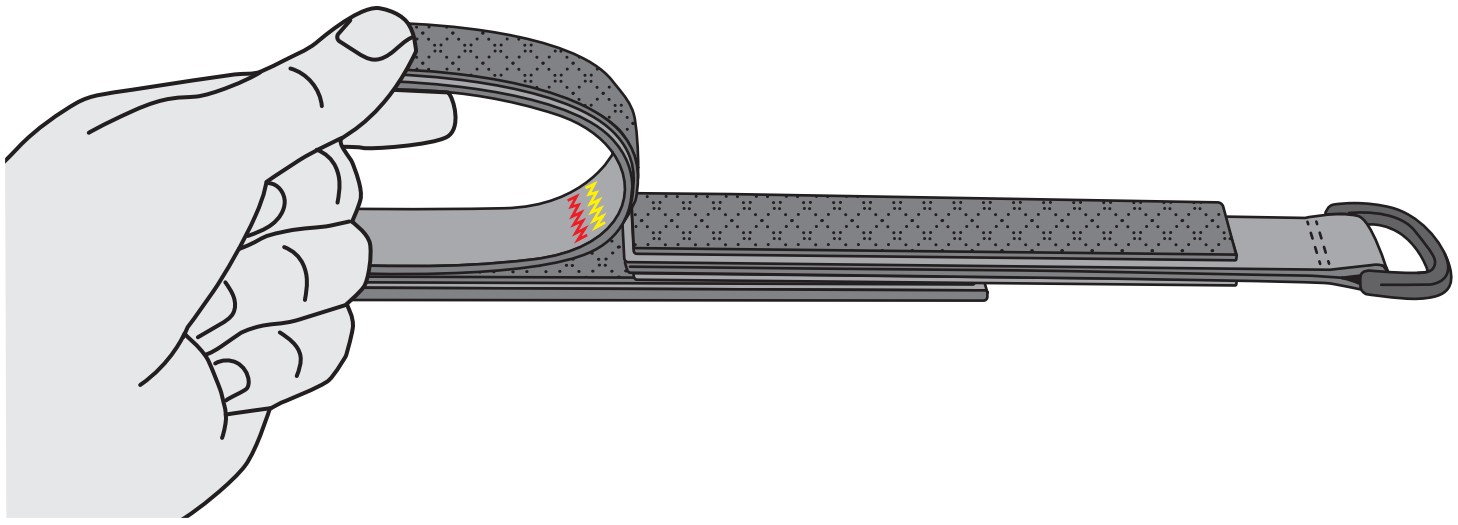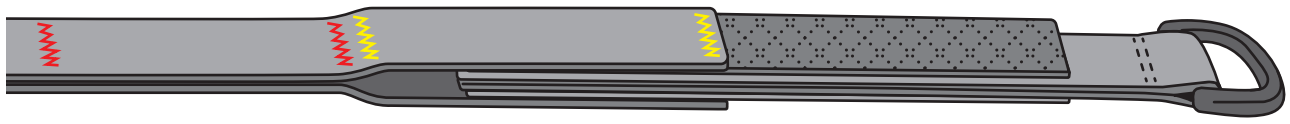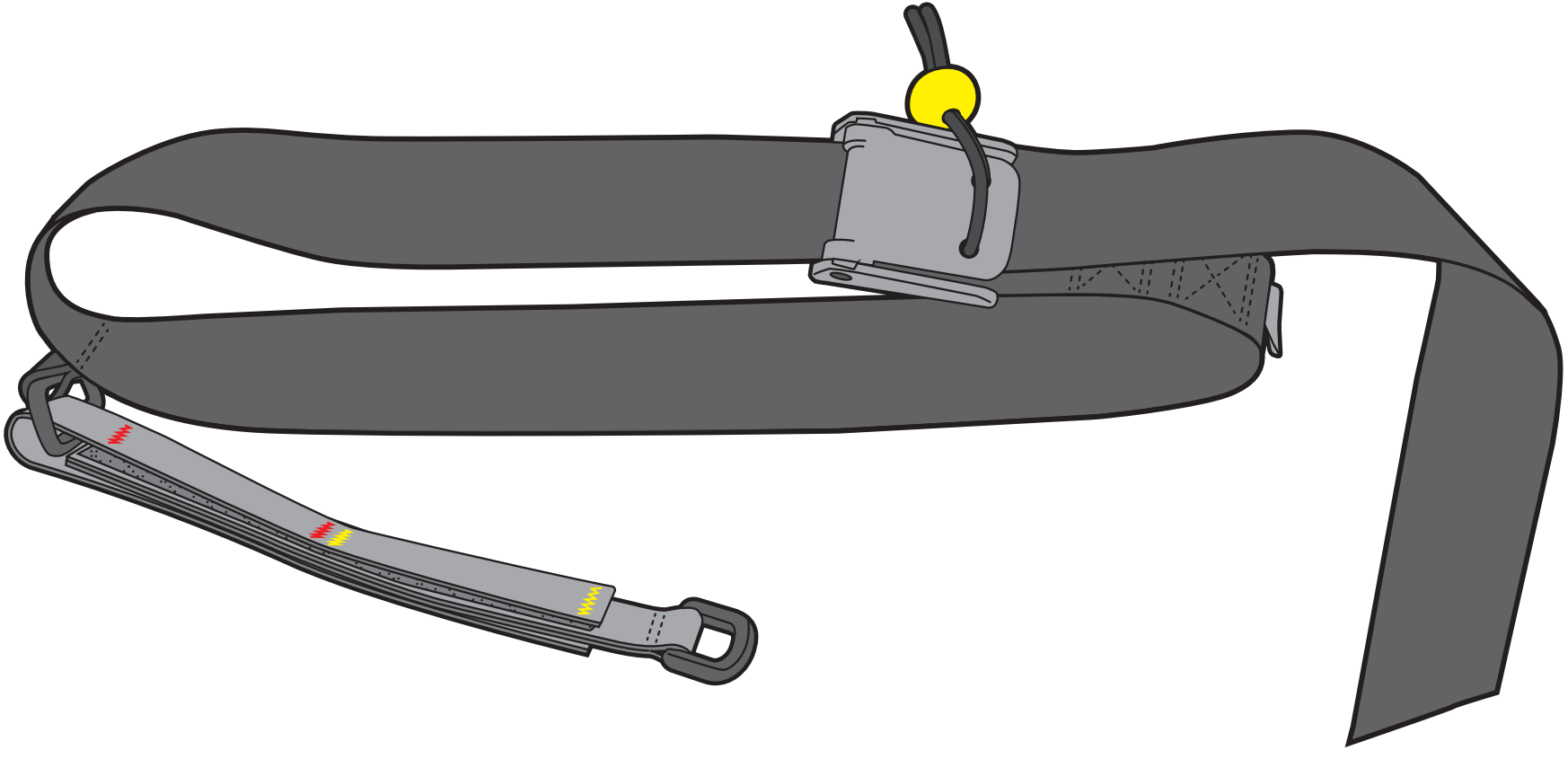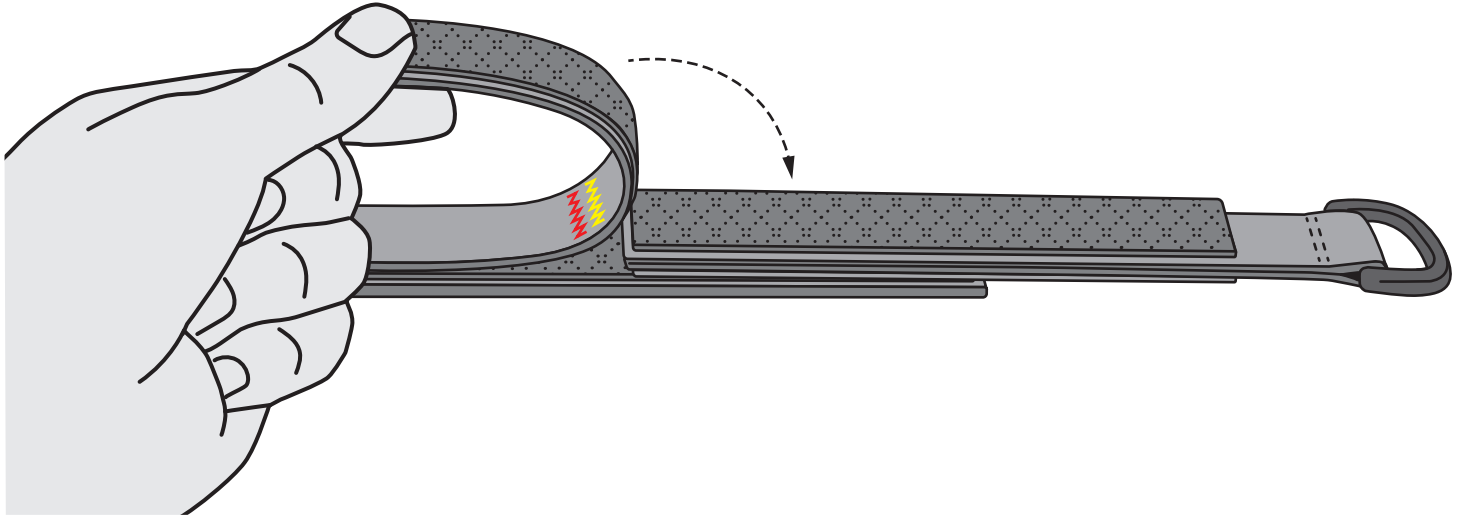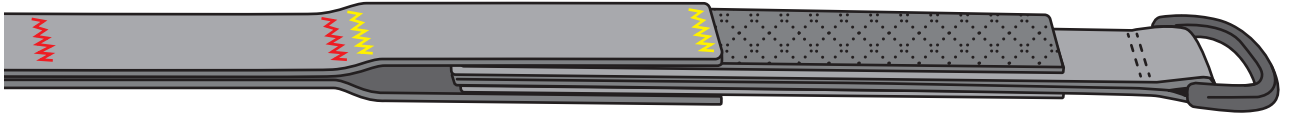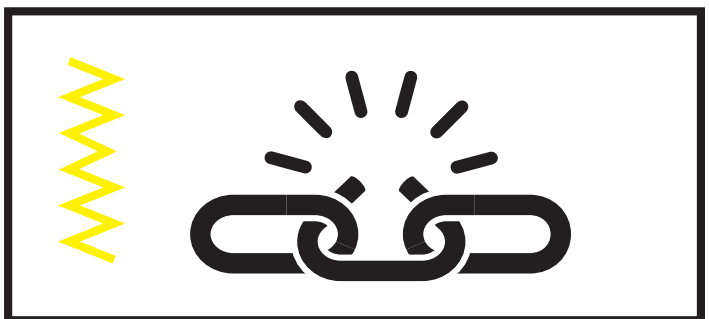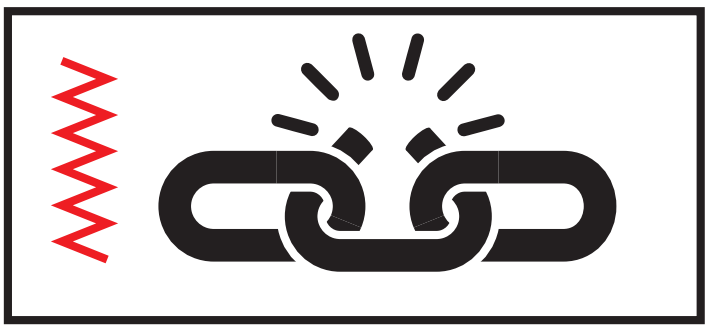
Part A
Part B